Terrasol

INSTALLATION MANUAL

Awnings Arinna

Roller Blinds | Venetian Blinds | Nets | Gates | Pergolas | Awnings

www.terrasol.se

Awnings Arinna

CONTENT

LIST OF COMPONENTS....3
PRODUCT DESCRIPTION....5
IMPORTANT SAFETY INSTRUCTIONS....5
PREPARATION FOR INSTALLATION....7
INSTALLATION....7
USE OF THE AWNING....13
AWNING FABRIC INFORMATION....15
MAINTENANCE....15
DISASSEMBLY AND STORAGE....16
GENERAL WARRANTY CONDITIONS....17
WASTE MANAGEMENT....17

Awnings Arinna

⚠ **IMPORTANT**: Read this manual before use and installation of the product. Keep this manual for the future.

⚠ **IMPORTANT:** The reference images used in the manual may differ from the actual product image.

LIST OF COMPONENTS

Main technical parameters

Maximum size for wall/ceiling mounting: – 6,0 x 4,0 m (width x projection);
Minimum size – 2,853x 2,5 m (width x projection)

You must find the following parts in the package:

Part	Image	Quantity
Awning		1 pc.
Wall brackets	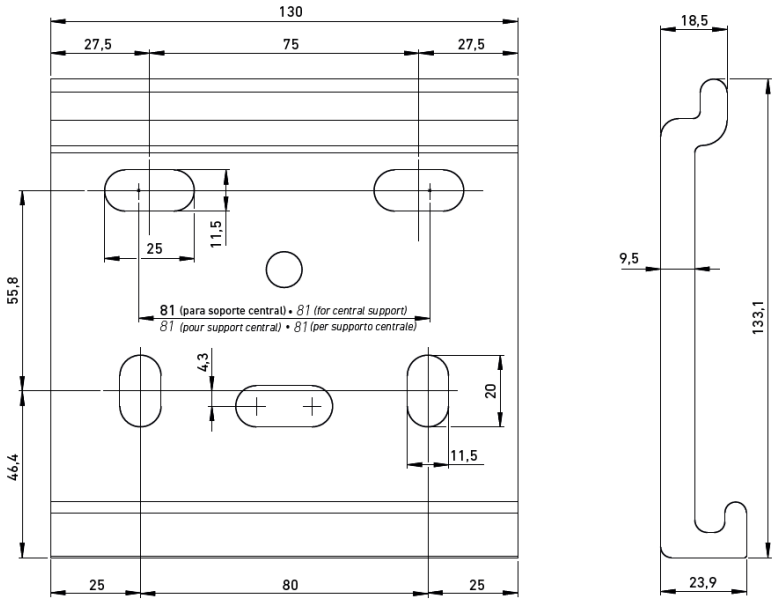	2 pcs.
Ceiling brackets	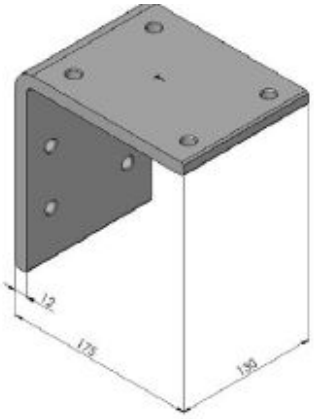	2 pcs. if ceiling brackets are chosen.

Awnings Arinna

Part	Image	Quantity
Extended wall bracket **L=650mm**	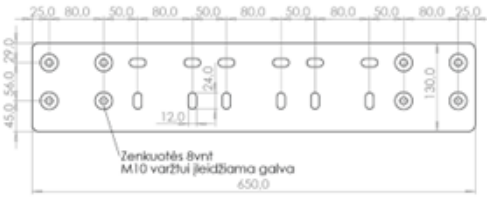	2 pcs. if extended brackets are selected.
Operating arm		If chosen.
Emergency opening axis		If motor control is selected; with emergency opening function.
Remote control		If chosen.
Vibro sensor		If chosen.
Receiver		If chosen.

IMPORTANT! Fixing elements are not included in the set. Fixing elements (bolts, anchors, etc.) must be bought before the installation, considering the structure of the wall for the installation. If you are unsure about the choice of fixing elements, consult the specialists (fixing elements) or contact Terrasol experts for the installation of the awning.

Awnings Arinna

PRODUCT DESCRIPTION

The structure of the terrace awning is intended for installation on the wall or ceiling of the building. The awning fabric can be unfolded with the help of a handle (manual control) or a motor (motor control), thus creating sun and visual protection. The structure of the awning is designed and intended for use in your home as protection from the sun, do not use the awning as protection from the rain.

Before purchasing or installing the awning, measure the place (wall) to be used for installation with a tape measure. The width required for the installation of the awning is equal to the width of the awning + 5 cm slack on both sides of the awning. Installation height: 30 cm.

Wall mounting

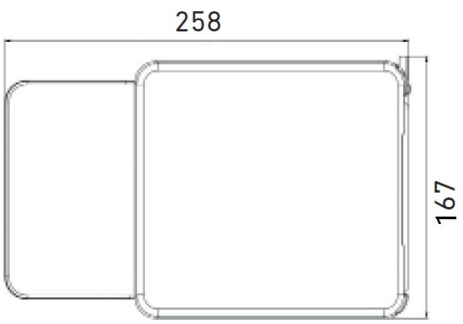

Ceiling installation

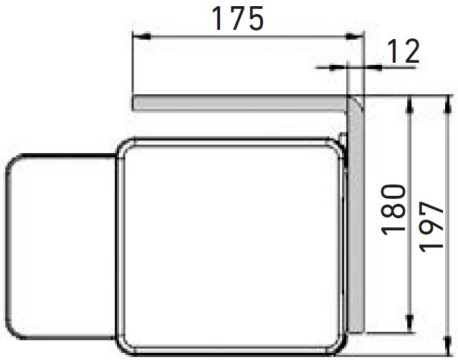

IMPORTANT SAFETY INSTRUCTIONS

For your safety and the safety of others, you must follow and observe the safety instructions below.

Symbol description

⚠ This warning sign in the manual indicates the danger that can result in serious injuries or death or are important to the proper operation of the awning.

Safety instructions

⚠ This product is not intended for use by persons (including children) with reduced physical, sensory or mental capabilities or lack of experience and knowledge unless they have been given supervision or instruction concerning the use of the appliance by a person responsible for their safety.

⚠ Keep children away from the product, its equipment and controls.

⚠ Constantly monitor and maintain the installed product, pay attention to possible signs of wear and damage to the structure. Do not use the awning if the construction of the awning or its mounting in the wall is damaged and repairs are necessary.

Awnings Arinna

⚠ Do not use the awning while cleaning or maintenance works are taking place near the awning, e.g. window cleaning.

⚠ Do not make any changes and modifications to the awning's structure or design without the written approval of the manufacturer or seller.

⚠ Technical knowledge and preparation are necessary for the installation of the awning. Do not install the awning yourself:

- If you are not sure whether the awning can be installed in the location of your choice.
- If you do not understand the installation instructions or any part of it;
- If you do not have the tools necessary for the installation;
- If you do not have proper technical knowledge.

⚠ Do not install the awning if you notice that the structure of the awning or its components is damaged or missing. Do not start the installation without proper fixing elements.

⚠ The awning can be installed only on a flat wall or ceiling of the building. If the wall or ceiling is unstable or cracked, consult construction specialists or contact Terrasol experts for the installation.

⚠ This manual is intended for mounting on a solid masonry or brick wall. If the wall of the building for the installation of the awning consists of porous blocks and has an insulation layer or clinker finish, we recommend that you contact Terrasol experts for the installation.

⚠ Make sure that your hands are clean during the installation to avoid staining the fabric of the awning.

⚠ Do not use the awning in cold weather or at a temperature below 0 since this may damage the awning, and the warranty will be void.

⚠ Do not use the awning while snowing since this may damage the awning, and the warranty will be void.

⚠ In the event of stronger rain or wind, fold the awning. The guarantee does not cover the damage due to rain or wind.

⚠ It is forbidden to climb, hold on to or hang any objects on the installed awning.

⚠ The unfolded awning is subject to different factors, including wind and rain. These forces are transmitted through the brackets of the awning to the fixing points in the wall, so it is particularly important that these fixing points are on a solid wall or specially reinforced (e.g. using an anchoring material). If in doubt about the suitability of the wall for the installation, we recommend that yc

Awnings Arinna

⚠ Awnings are only for protection against the sun. They cannot be used in case of strong wind, rain, hail or snow, and the awning must be fully folded in such conditions.

PREPARATION FOR INSTALLATION

⚠ Make sure that no children or pets are present during the installation so that they do not injure themselves with the parts of the awning or tools.

⚠ Be careful, as in very rare cases, the awning can unfold itself suddenly.

Carefully take the awning out of the package and put it near the installation site, where it will not be damaged or stained.

Installation tools:

- Automatic drill;
- Concrete drill;
- Fixing elements for wall mounting;
- Spirit level;
- Wrench;
- Hexagonal key;
- A safe platform for work at height;
- Tape measure;
- Marker (pencil, chalk);
- Hammer.

Fixing elements are not included in the set. Fixing elements (bolts, anchors, etc.) must be bought before the installation, considering the structure of the wall for the installation. If you are unsure about the choice of fixing elements, consult the professionals (fixing elements) or contact Terrasol experts for the installation of the awning.

INSTALLATION

⚠ IMPORTANT: this section contains important safety instructions and, if not followed, can result in serious injuries or death!

⚠ This manual is intended for mounting on a solid masonry or brick wall or stable and solid ceiling. If the wall or ceiling of the building for the installation of the awning consists of porous blocks and have an insulation layer or clinker finish, we recommend that you contact Terrasol experts for the installation.

Awnings Arinna

The base must be flat (not convex) so that the awning brackets are mounted in one plane. Brackets mounted in an uneven plane can cause the whole structure to become curved/crushed, and the awning might be damaged or operate incorrectly.

At least three healthy adults are required to install the awning because the product is large and heavy. When installing the awning, comply with all applicable occupational safety and health regulations and legislation, including work at height. Do not attempt to install the awning alone. Due to incorrect installation, the awning can fall and cause serious injuries or death!

To ensure a smooth and safe installation, consider and mark the mounting points on the wall before the drilling of the holes.

1. Choose an installation height for the awning

You can choose any installation height that you prefer. We recommend paying attention to the structure of the wall and building, as well as the planned slope of the awning. The recommended slope of the awning is adjusted by the manufacturer (25 degrees), but after installation, the slope can be adjusted according to your needs from 0 to 75 degrees. A slope of less than 14 degrees is not recommended, due to water runoff during rain.
f the required slope is greater than 40 degrees, it must be specified when ordering the awning.

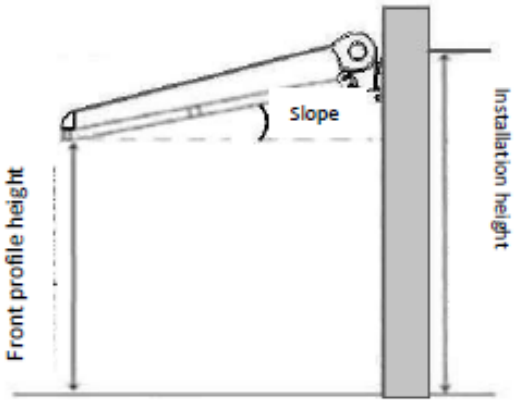

We recommend choosing the installation height and awning slope such that the front profile is at least at the height of 2.2 m when the awning is fully unfolded.

We recommend choosing the installation height so that the lower holes of the awning brackets are at least at the height of 2.8 m from the base. If the awning is installed above the door or a window, holes for the brackets should be drilled at least 20 cm above the door or window opening.

2. Mark the fixing places of the brackets

At the selected installation height, mark the locations where the holes in the wall will be drilled for mounting the brackets. At this height, draw a horizontal line on the wall using the marker and spirit level. Double-check if the wall along the line is flat.

Awnings Arinna

⚠ ATTENTION! The fixing points of the brackets must be aligned horizontally! Otherwise, you won't be able to insert the awning into the brackets and adjust it because the holes will be already drilled. We recommend double-checking if the fixing line of the brackets is completely horizontal and in the same line! If you have a possibility, use a laser level for marking fixing points

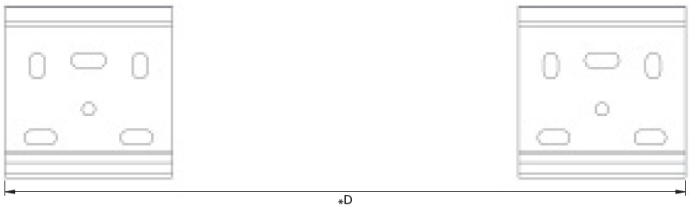

D the distance between the outer edges of the brackets.

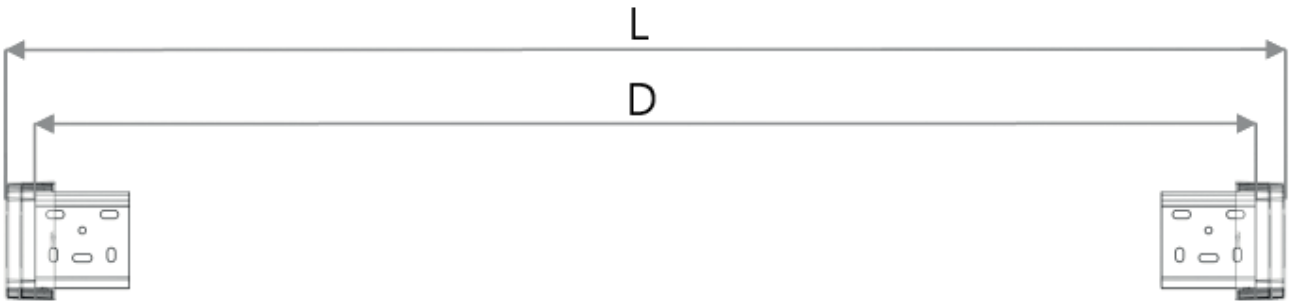

L – awning width
D – distance between brackets

D=L-44 mm, when the awning is controlled by a motor without emergency opening and there is no LED lighting;
D=L-83 mm, when at least one of the following conditions is met:

1. the awning is controlled by a motor, with emergency opening;
2. awning with LED lighting;
3. the awning is controlled manually.

Awnings Arinna

Ceiling mounting with ceiling bracket is also possible.

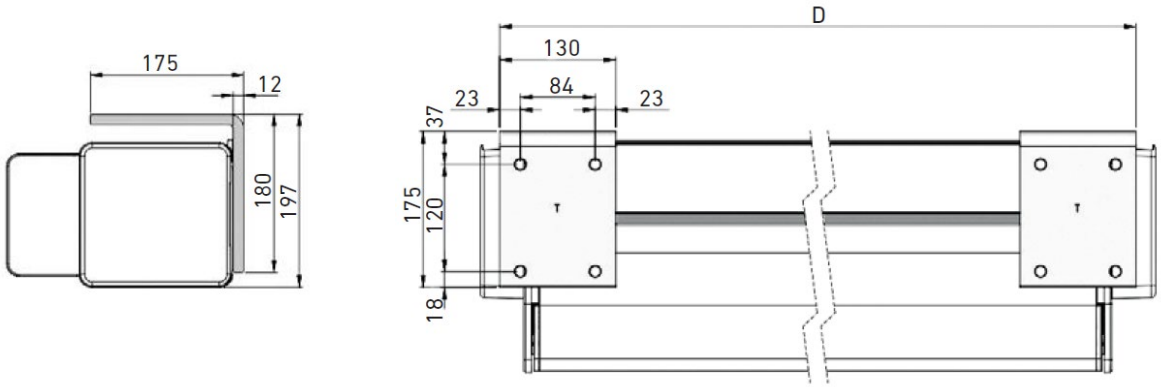

Put the awning bracket on the marked lower hole and mark the appropriate points on the wall or ceiling. The bracket should be attached with five bolts. Use the spirit level to make sure that holes of each bracket are aligned vertically.

3. Drill the holes in the wall

⚠ Attention! From here, the manual provides information on how to install in a solid masonry wall without insulation. If the wall is insulated, you should choose other bracket anchoring solutions, e.g. Fischer Thermax.

Drill the holes in the marked spots using an automatic drill and concrete drill. Use a drill bit with a diameter that is suitable for your anchoring pin (we recommend drilling Ø14 diameter holes and use appropriately sized anchoring pins). The holes should be at least 9 cm deep (depending on the anchoring pin).

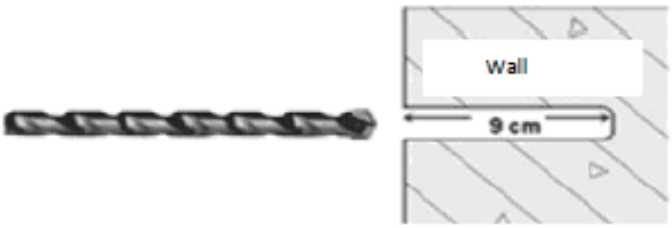

⚠ If you feel that the wall is easy to drill or the holes feel loose, double-check that the structure of your wall is strong enough for this type of installation. Consult the professional!

Awnings Arinna

4. Insert anchoring pins

Use only heavy-duty anchor pins and bolts suitable for the wall structure (at least 5 kN load per point).

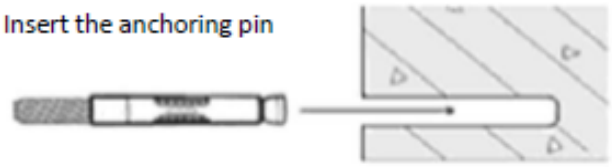

After drilling, blow dust out of the holes. Insert heavy-duty anchoring pins. If necessary, use the hammer to insert the pins into the wall. Note that you should insert the anchor pin into the hole easily with a hammer. If you feel a slight resistance, do not force the pin because this may damage heavy-duty anchoring pins. If you cannot insert the pin, take it out and try to widen the hole in the wall but not too much because the pin should be inserted tightly. An anchoring pin should be fully inserted into the hole.

5. Fix the brackets

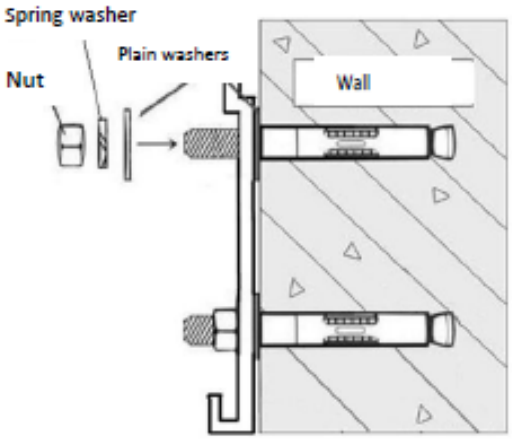

Attach the brackets as shown in the picture. We recommend using four anchoring pins for the attachment of one bracket. Use washers between the bracket and the wall and between the bracket and the nut.

Tighten all the nuts of the brackets tightly. If at least one anchoring pin gets loose while attaching the brackets, return to installation steps 3-4. All mounting points for the brackets must be firmly attached to the wall structure. Consult a professional if necessary!

6. Attach the awning to the brackets

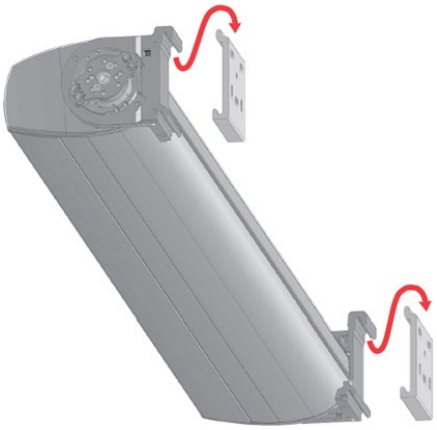

The awning can be attached to the brackets when both the brackets are properly attached to the wall structure. Lift the awning and put it on the brackets. At least three healthy adults are required for this job.

Tighten the attachments that fix the awning to the brackets.

Awnings Arinna

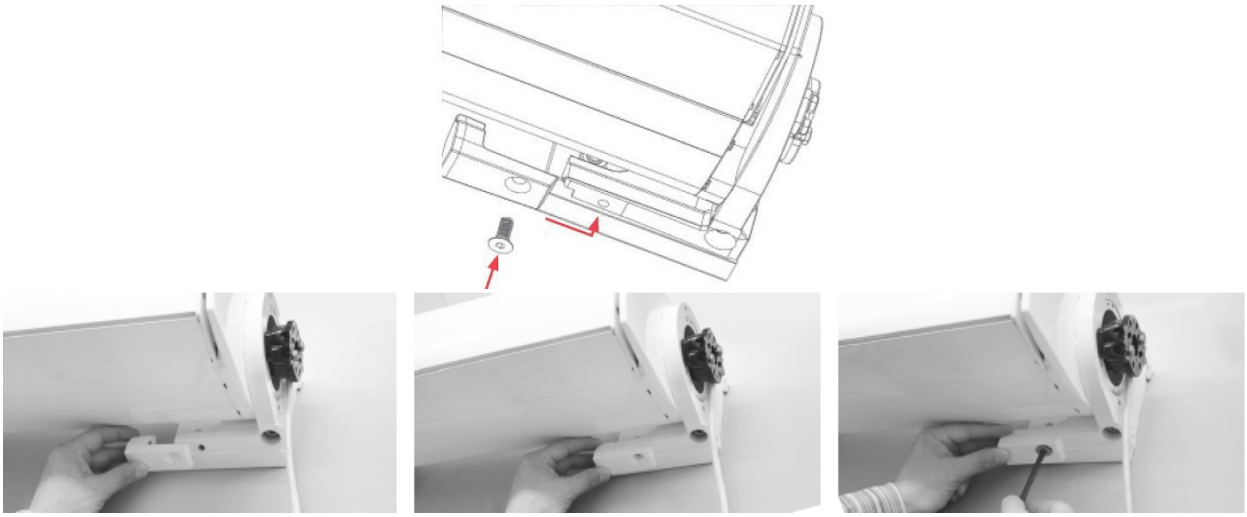

For work at height, use suitable and safe climbing devices, place them only on a solid base.

Attention! The improperly installed awning can pose a serious danger to you and others. Only install and start using the awning if you fully understand these installation instructions and the wall or ceiling construction to which you are installing is suitable for installation. For your safety and the safety of others, we recommend that you contact Terrasol professionals for assistance.

Awnings Arinna

USE OF THE AWNING

Angle adjustment

The recommended slope is adjusted by the manufacturer (25 degrees), but you can adjust the slope after the installation if required: from 0 to 75 degrees. A slope of fewer than 14 degrees is not recommended, although the adjustment mechanism allows for a smaller angle.

⚠ If the necessary angle exceeds 37 degrees, this must be specified during the ordering of the

awning. Loosen the bracket screws at both ends of the awning.

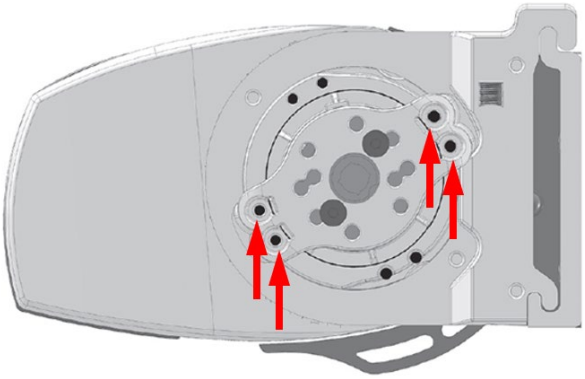

Unfold the awning at least to ¼ of its total depth. Adjust the arm angle by turning the M6 bolt.

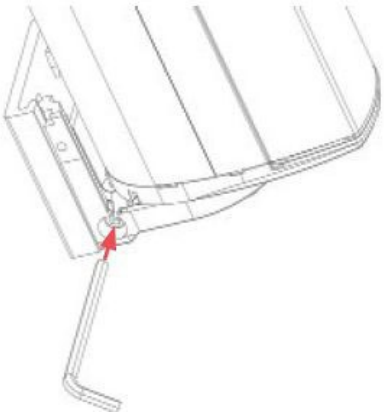

⚠ When the adjusting screw reached the end position, do not turn the screw using force. Failure to do so may result in damage to the awning design, danger, and the guarantee may become void.

Repeat this adjustment procedure for the other arm of the awning so that they have the same slope.

Awnings Arinna

Unfolding and folding of the awning and manual control.

The awning can be unfolded and folded using the included handle.

Attach the hook of the handle on the ring located on the side specified in the order. Unfold or fold the awning by turning the handle.

The manual control of the awning does not have an end position, so when the awning is fully extended, stop turning the handle to avoid turning the fabric to the other side of the tube. Arms of the fully unfolded awning should not be fully extended; leave them slightly bent.

⚠ When you are not using the awning, unhook the handle from the ring and place it safely out of the reach of children.

⚠ The awning is only for protection against the sun. It cannot be used in case of strong wind, rain, hail or snow, and the awning must be fully folded in such conditions.

⚠ Always make sure that the fabric of the unfolded awning is tight. If the fabric is not tight, you have probably unscrewed the awning fabric too much, then fold the awning a little to make the fabric tight.

⚠ Do not allow children to play with the awning.

⚠ Do not insert any objects or body parts (hands) into the construction of the awning, especially during the folding/unfolding. The danger of crushing!

⚠ When the front profile of the awning reaches the structure of the awning, do not try to force the profile even closer, as this may damage the awning.

Unfolding and folding of the awning and motor control.
Adjust the motor of the awning according to the motor programming instructions. Arms of the fully unfolded awning should not be fully extended; leave them slightly bent. The front profile of the fully folded awning should not squeeze the folded fabric.

⚠ The awning is only for protection against the sun. It cannot be used in case of strong wind, rain, hail or snow, and the awning must be fully folded in such conditions.

⚠ Do not allow children to play with the awning.

⚠ Do not insert any objects or body parts (hands) into the construction of the awning, especially during the folding/unfolding. The danger of crushing!

Awnings Arinna

AWNING FABRIC INFORMATION

Only the highest quality materials are used for the production of awnings. However, even with the most advanced technologies, it is impossible to avoid certain fabric changes that occur to some degree in almost all awning fabrics. These properties of the awning fabrics do not reduce the basic protection against the sun in any way. The following are the main natural changes in the fabrics of the awnings:

- In fabric seams the fabric has a double layer, so when folding it on the tube, the diameter of the fabric is uneven. When stretching, a so-called “waving” effect occurs at the seams (1, 2), in the middle of the fabric (3) or at the edges (4).
- Wrinkles occur when the awning is folded. In places where the fabric wrinkles, a small line (1, 2, 3) may be visible in a given light. This may be more visible on darker fabrics.
- The edges of the fabric are subject to high loads and may fall slightly (5).
- Acrylic fabrics are coated with a resin that not only improves the properties of the fabric but also increases its stiffness. This is an important requirement considering the conditions under which the fabric is used. This can cause micro-translucent areas, especially at wrinkles, seams, waves, or fabric damage.
- While impregnating the fabric, it becomes very sensitive to scratches that are difficult to avoid even during a very precise manufacturing process. This feature is common in monochrome colours.
- All fabrics of the awnings are impregnated and, with a minimum slope of 14 degrees, can withstand light short rain. During heavy or prolonged rain, the awning should be folded. The water accumulated on the awning can increase the load on the brackets and cause slight deformations and wrinkling of the fabric. If the damp fabric is folded, it should be unfolded after the rain stops and left to dry.

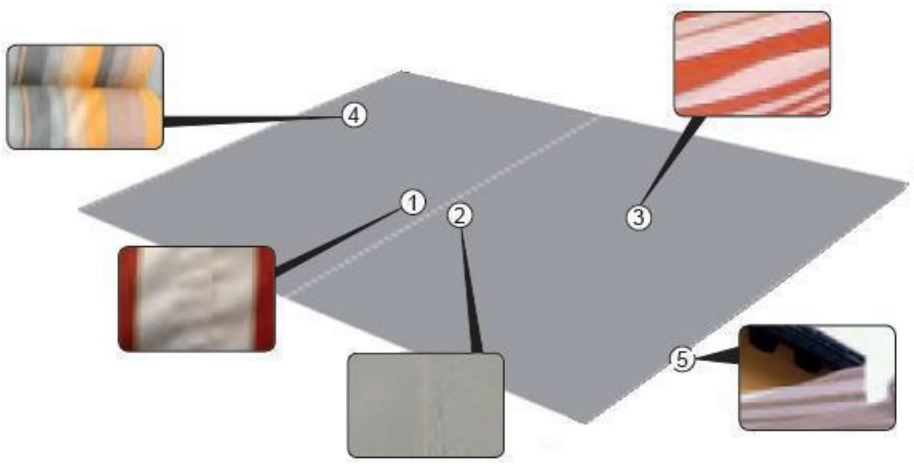

All changes to the fabric cannot be considered as a basis for the claim since they are unavoidable and do not interfere with the use of the product.

MAINTENANCE

Regular maintenance of the product will not only extend the service life of the product but also is important for your safety and for the safety of others. The maintenance of the product includes:

- Inspection of the awning structure and mounting points;
- Fabric cleaning;

Awnings Arinna

- Cleaning of visible and accessible components.

Inspection of the structure and mounting points;

- Regularly check if wall brackets are attached properly. Tighten the brackets if they are loose.
- Check all the bolts and nuts once every six months and tighten them if they are loose.
- You can lubricate the moving parts of the awning with grease suitable for plastic. Do not use oil-based grease.

Be careful not to stain the areas that come in contact with the fabric of the awning.

⚠ Stop using the awning and contact the professional for assistance if the structure of the awning was damaged or became unstable or fixing points in the wall became loose. Failure to do so may endanger the safety and life of you and others!

Cleaning of construction elements

We recommend cleaning the surface of the product using only water and mild detergents. It is forbidden to use aggressive detergents or abrasive products that may damage the surface.

Fabric cleaning

- The fabric must be fully unfolded for the cleaning.
- Clean the dirt with a soft brush or cloth.
- Clean the fabric using only water and slightly soapy water (maximum water temperature: 30 ^{o}C).
- It is forbidden to use solvents or other aggressive detergents and cleaning products.
- After using water and soap solution, the fabric should be thoroughly washed with clean water.
- Allow the fabric to dry before folding it. Do not use dryers or heaters.
- It is forbidden to use high-pressure cleaning devices, sponges, cleaning products or solvents, e.g. alcohol, etc.
- The use of cleaning agents containing chlorine, ammonia, kerosene, acetone and other bleaches is prohibited, as they may damage the surface of the product, which would increase the risk of corrosion.
- It is forbidden to use sharp objects (wire brushes), cleaning products that may scratch the surface (e.g. cleaning powder).

⚠ Improper product maintenance can result in product damage.

DISASSEMBLY AND STORAGE

If you intend not to use the awning for a long time, we recommend removing it from the wall brackets and storing it in a dry and safe place. Disassembly is carried out in the same installation procedure, in reverse order:

- The same requirements for safe and healthy operation apply to disassembly as specified in the installation steps.
- Begin the disassembly by folding the awning and tying the arms with protective straps.

• If you plan to reassemble the awning on the same wall later, we recommend that you do not disassemble and leave the wall brackets in place.

• If you reassemble the awning on the same wall brackets, inspect the stability and solidity of the brackets before installation. Do not install the awning on the same brackets if they are loose or not stable.

GENERAL WARRANTY CONDITIONS

The warranty is void if:

• The damage occurred during transportation by a non-seller vehicle.

• The damage occurred due to improper storage, installation or non-compliance with the product's maintenance requirements if these are carried out by the client.

• Defects have been caused by non-compliance with the instructions of the seller and recommendations defined in this manual and other technical documentation.

• Mechanical damages occurred not due to the seller.

• The damage was caused by the modifications of the buyer.

• Damages occurred due to defects that were not reported to the seller, and the client continued to use the product despite the defects. In this case, the seller can assess the damage and carry out repairs only after the client pays for this service.

• Damage occurs due to the use of inappropriate cleaners, lubricants, etc., except as specified in the maintenance section.

• The damage was caused by improper installation of the product.

• The damage was caused by repairs or modifications made by the client.

• The damage was caused due to contamination of the product.

• Asymmetrical fabric wrapping due to dirt (e.g. leaves, dirt, etc.)

• The damage was caused by the use of the awning in bad weather conditions (e.g. rain, snow, ice, hail).

• The product is used with damaged components.

• Damage occurred when using the product at a temperature of 0°C or below 0°C.

• This is called the jumping effect, i.e. small axial deviation related to the slight bending of the pipe and fabric attachment. This effect does not influence the proper use of the product.

• The damages occurred due to the installation of fewer brackets than specified in the manual.

WASTE MANAGEMENT

⚠ The product packaging contains bags and strips, as well as small parts that can put children at risk of suffocation or strangulation. Do not let the children play with the parts of the package and dispose of the package safely.

Dispose of the package of the product or the product at the end of its life according to the local waste collection and recycling rules.